NOTE: THIS END OF PANEL MUST BE UP. PANEL MUST BE VERTICAL TO OPERATE.

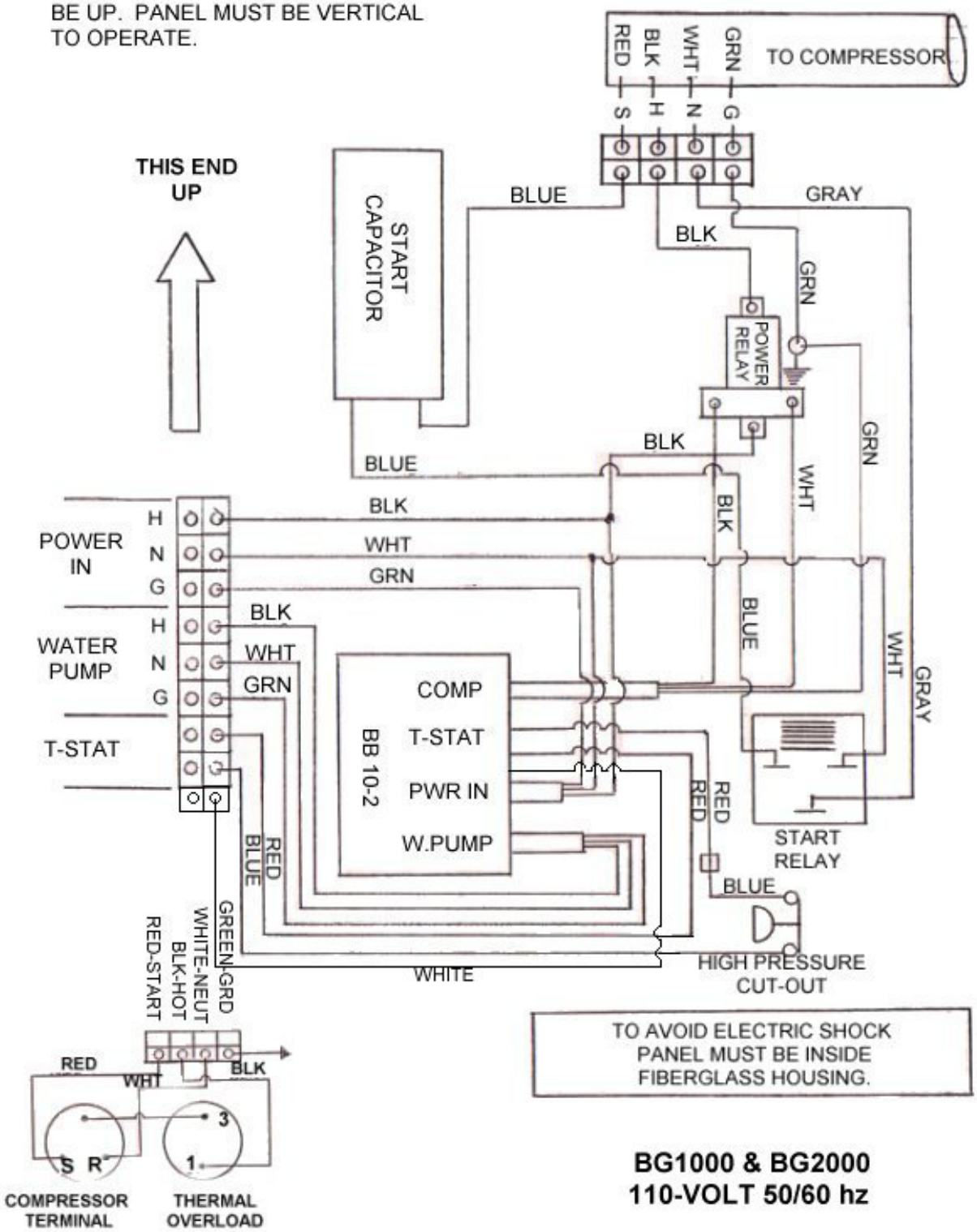

TO AVOID ELECTRIC SHOCK PANEL MUST BE INSIDE FIBERGLASS HOUSING.

BG1000 & BG2000
110-VOLT 50/60 hz